UOM=inches

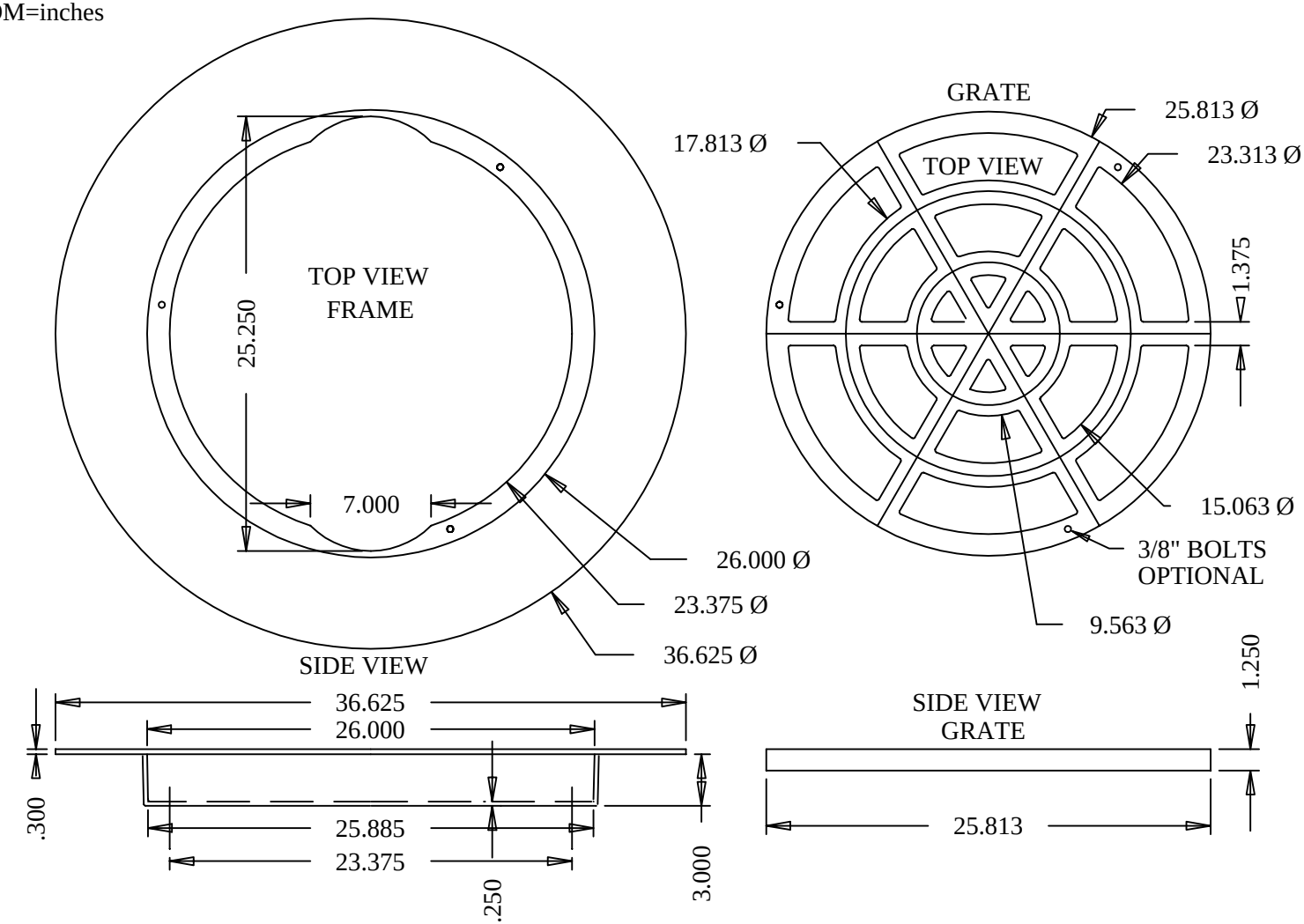

Royal ENVIRONMENTAL SYSTEMS, Inc.

www.royalenterprises.net

protect TODAY by building for TOMORROW

27" Sediment Control Barrier (SCB) Frame & Safety Grate

Standard Details

P.O. Box 430 • 30622 Forest Blvd • Stacy, MN 55079 • Ph: 651.462.2130

Plate #
SCB-27FG

Rev. Date:
2-16-04 SEG